CCTV Connection manual for one Camera

1. How to directly Connect one CCTV Camera to the Indoor Monitor

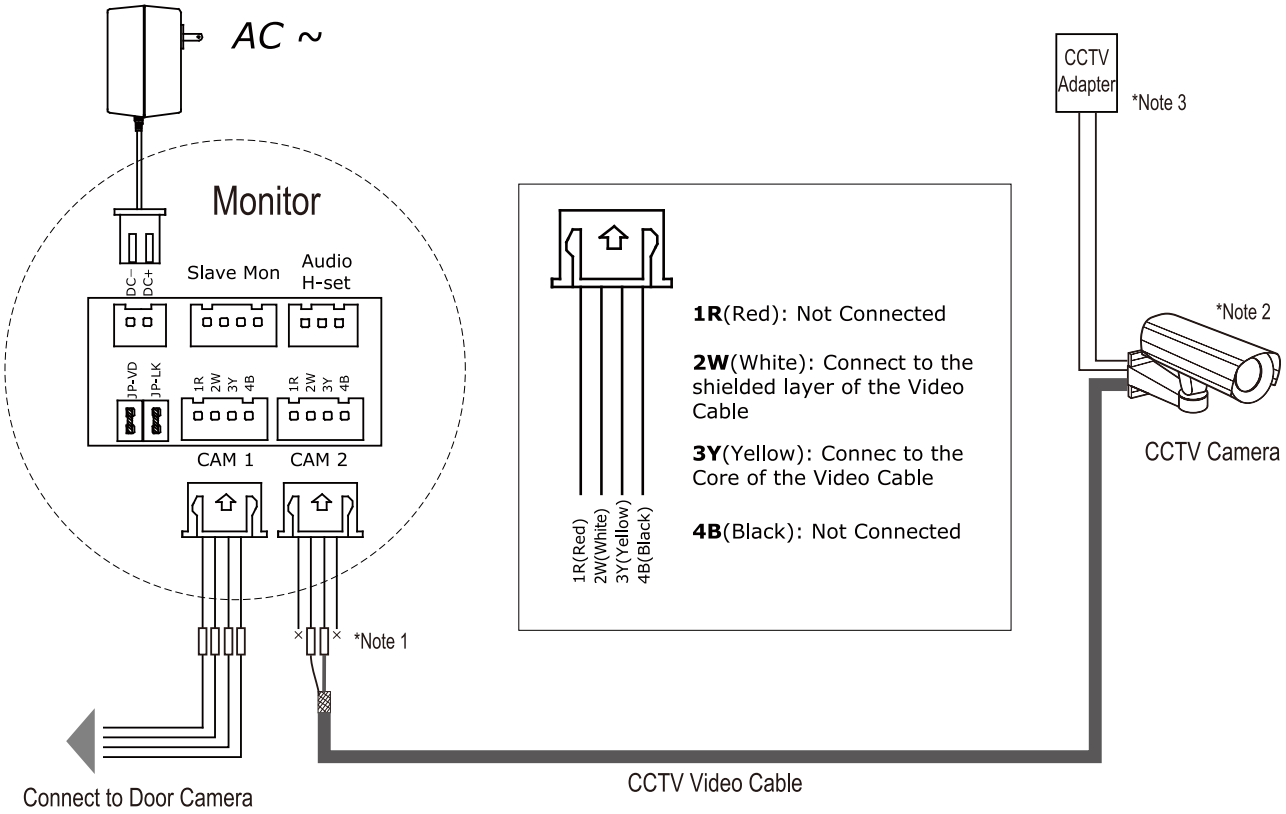

Note 1: Connect the video core to the 3Y (yellow) wire; connect the shielded layer of the video cable to the 2W (white) wire. Please connect the wire securely (solder if necessary).

Note 2: The type of the CCTV Camera to be used is not limited.

Note 3: Power the CCTV camera with the power supply provided by the manufacturer. Do **not** use the Video door entry power supply.

2. Enabling and Monitoring the CCTV Camera using the Video door entry system

Enable the CCTV Camera: To enable the CCTV function, the ***1/2 Camera*** option on the Monitor should be set to 2. To do this, touch SETUP icon to enter ***Setup***. Now press ***Advanced Set...*** submenu. Enter the password (2008), and set 2 to the ***1/2 Camera*** item.

Monitoring Operation: When the Indoor Monitor is in standby, press the Monitor Button (or enter ***Main*** page, then select ***Monitor*** item), the video image of the first Camera will be displayed. Press the Monitor Button again to switch to the CCVT camera. Press the Monitor Button again to exit.