V-TEK

DMR21 TECHNICAL MANUAL

2EASY

Apartment Intercom System

2-wire series

VOSPER

CONTENTS

DMR21/S8

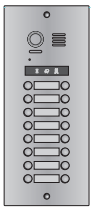

DMR21/D16

DMR21/S4/F1

DMR21/D8/F1

DMR21/F2

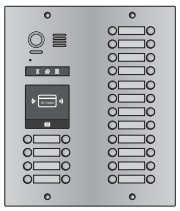

DMR21/D32/F1

EP21/F3

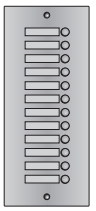

EP21/S12

DESCRIPTION

New generation Direct Call Apartments door stations are modular design with a flexibility to combine modules

For example,the video entry module can be assembled with card reader module and/or with keypad module

Additional combinations are available: TFT Screen Module with Proximity Reader Module or Keypad Module. Calling to apartments will be performed by Name List visible on the screen

PARTS AND FUNCTIONS

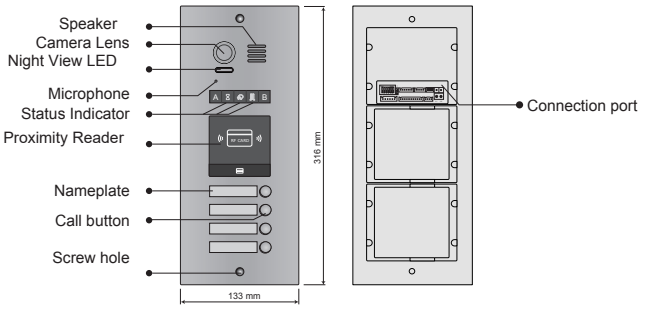

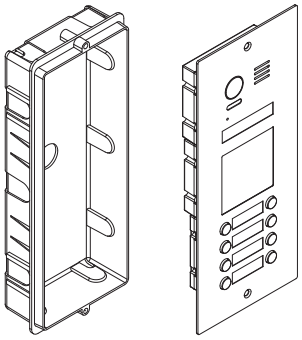

Embedded box Stainless steel panel

TERMINALS

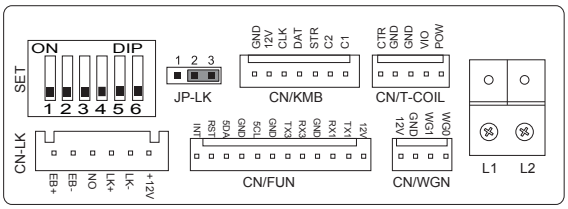

- **+12V:** 12VDC power output
- **LK-:** Power ground
- **LK+:** Common contact of the relay
- **NO.:** Normally open contact of the relay
- **EB+:** Exit button positive connection port
- **EB-:** Exit button negative connection port
- **JP-LK:** Electric lock type setting
- **SET :** DIP switches for door station settings
- **CN/KMB:** Call button module connection port
- **CN/T-COIL:** Reserved
- **CN/FUN:** Touch sensor keypad module or TFT display module connection port
- **CN/WGN:** Proximity reader module connection port
- **Bus(**L1,L2**):** Non-polarity bus line, connect to power supply

PLACE NAMEPLATE

Press down and move right/left to open the transparent nameplate cover. Then insert the name label and put the cover back. Note that double-row buttons panel can be opened both directions, single-row buttons can only be opened at the right side

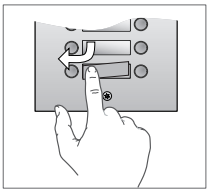

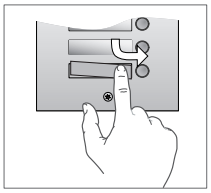

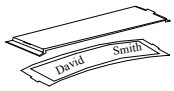

name label

MOUNTING

Standard mounting

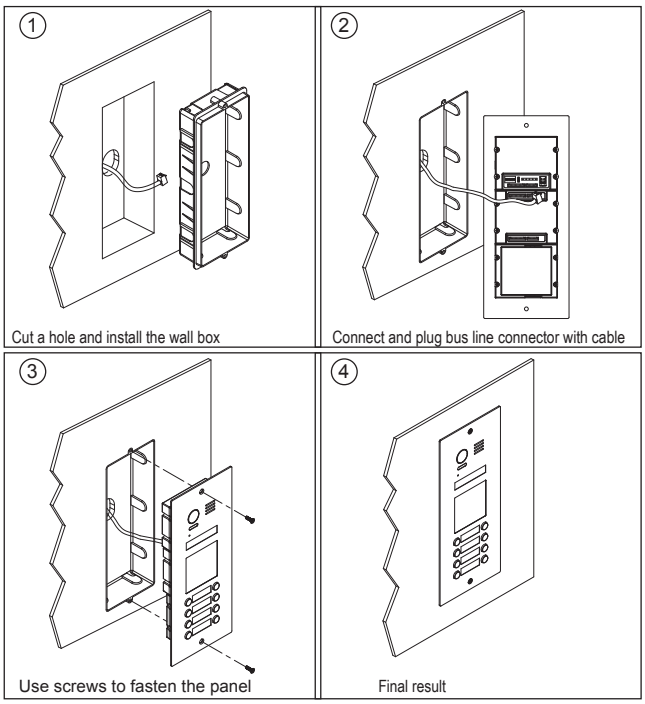

Mounting with expanding panel

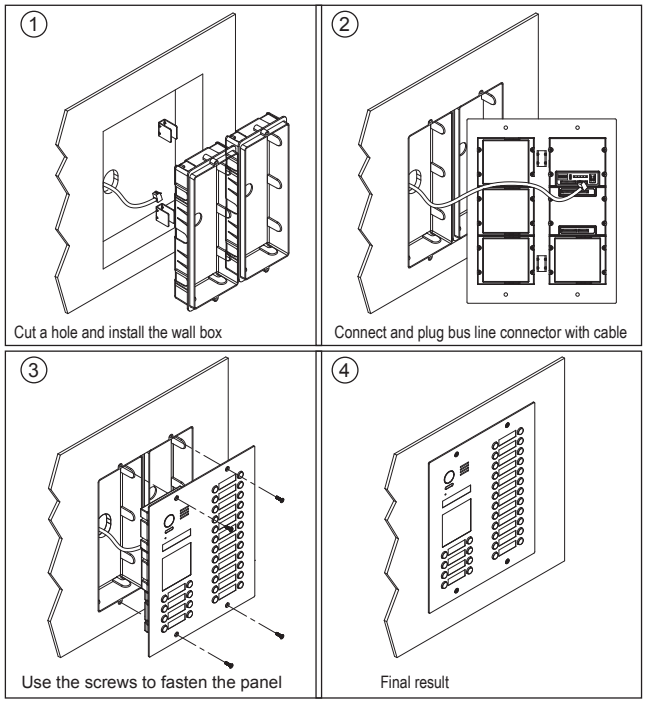

SYSTEM CONNECTION

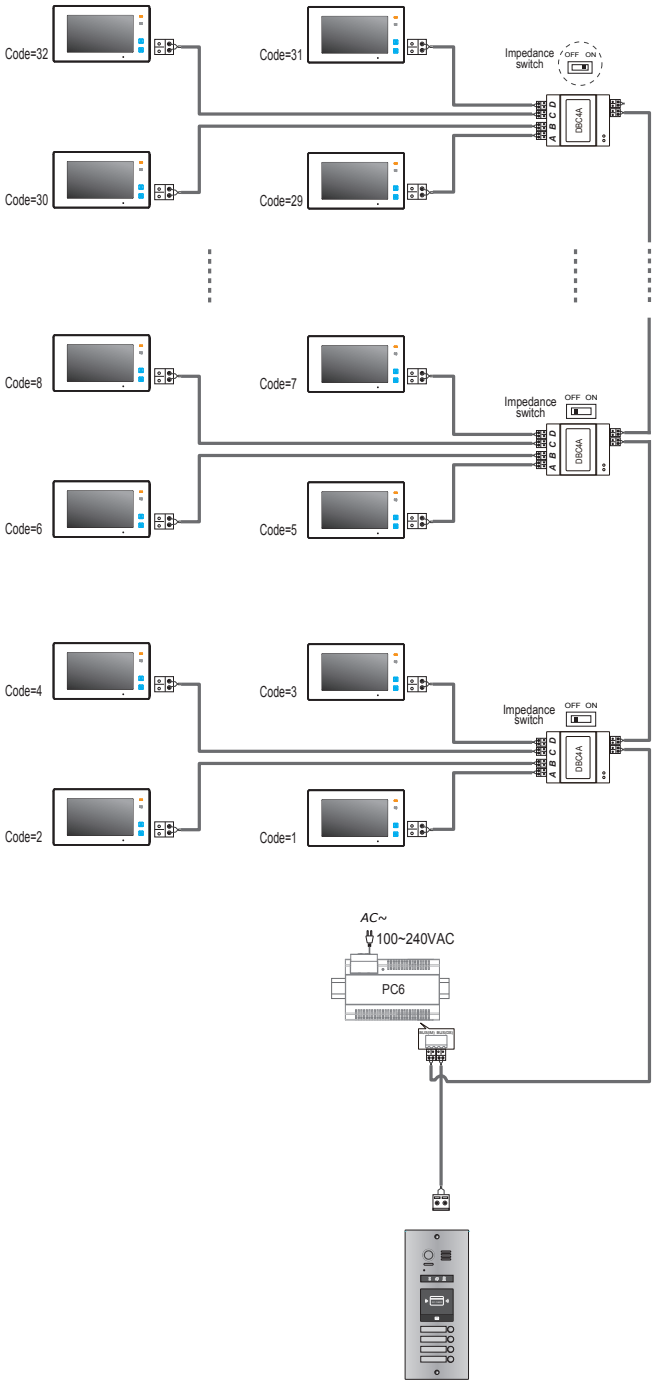

DIP SWITCHES SETTING

There are 6 DIP-switches on the rear of door station. The switches can be modified either before or after installation, but restarting the power is needed whenever the switches have been modified

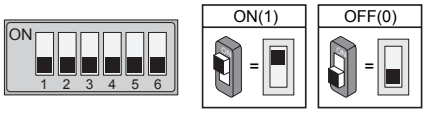

DIP-1 and DIP-2 are for door station ID setting. When multiple door stations are installed, the first door station address is 00 (default), the second door station address is 01: DIP-2 is On, the third door station address is 10: DIP-1 in On, the fourth door station address is 11: DIP-1 and DIP-2 are On

DIP-3 is for single or double row button door station selection. If the door station is a double row button, such as DMR21-D8, set this bit to 0. For single row button door station, set to 1

DIP-4 is for button code selection for Door Stations with buttons. All Buttons are pre-programmed with User Code/Address (see page 15). If you planning to use factory programming, keep DIP-4 Off. When factory programming going to be modified, change DIP-4 to On position

DIP-5 is for unlocking time quick setting. Off(0) is the default setting, and the default time is 1 second. If set On(1), the unlock time is 5 seconds (Different unlock time can be programmed, see page 5)

DIP-6 is for activating invisible key A and key B. Normally key A and key B is not active. To activate key A and B flip DIP-1 On
As well for uploading Namelist file via SD card

ELECTRIC LOCK CONNECTION

1) Door Lock Controlled with Internal Power

1. **The lock is limited to 12Vdc, and holding current must be less than 250mA when using internal power**

2. The Unlock Mode Parameter must be set to 0 (default)

3. Jumper set to position 1-2 for power-off-to-unlock type (*Normally closed mode*); set to position 2-3 for power-on-to - unlock type (*Normally open mode*)

4. Default unlocking time is 1 sec. See page 5 how to change unlocking time

Power-on-to-Unlock type:

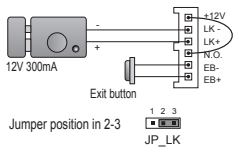

Power-off-to-Unlock type:

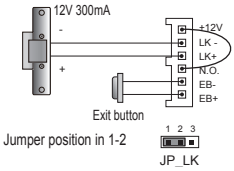

2) Door Lock Controlled with External Power

1. The external power supply must be used according to the lock

2. The jumper must be taken off before connecting

3. Setup the **Unlock Mode Parameter** for different lock types
- Power-on-to-Unlock type:Unlock Mode=0(default)
- Power-off-to-Unlock type:Unlock Mode=1

4. Default unlocking time is 1 sec. See page 5 how to change unlocking time

Power-on-to-Unlock type:

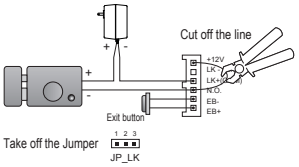

Power-off-to-Unlock type:

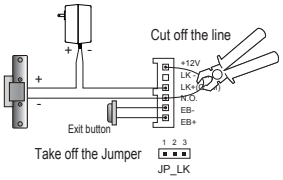

SPECIFICATIONS

• Power:	26Vdc (supplied by PC6)
• Power Consumption:	1W standby, 5W working
• Unlock Power output:	12Vdc, 250mA
• Unlock time:	1~99s
• Working temperature:	- 20ºC ~ +55ºC
• Dimensions:	H316 x W133 x D48mm

CAMERA MODULE

1. Parts and functions

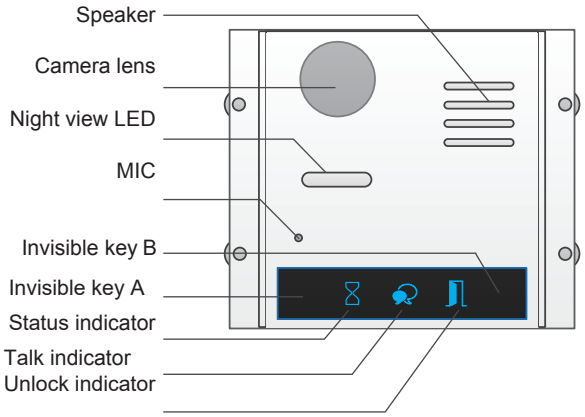

Note: Key A and key B can not be seen on the panel, they are cryptic Normally, key A and key B are not active. **To activate the buttons, just set the DIP6 to ON position**

2. Settings via Key A & B

Proximity Reader Door Station has the only way to set **Unlocking Mode** - via invisible keys A & B
For Keypad door station this can be changed via Keypad Module as well as via invisible keys A & B
Flip DIP-6 On to activate them

- **Unlocking Mode Setting**

1. Press Key A, **Unlock indicator** turns on with double beep sound

2. Press Key A again to set the **Unlocking Mode** to **Normally Open** or **Normally Closed**

Normally Open: **Status indicator** blinks once with beep sound

Normally Closed: **Status indicator** blinks twice with beep sound

If door station has TFT screen connected, current Unlocking Mode will be visible on the screen

- **Unlocking Time Settings**

1. Press Key A, **Unlock indicator** turns on with double beep sound

2. Press and hold Key B to change unlocking time from default 1s. Every beep and/or flash of **Status Indicator** increase unlocking time by second. If door station has TFT screen connected, time increase will be visible on the screen

- **Ringtone Settings**

1. Press and hold Key A for 3 seconds to enter the **Ringtone Option Mode**, the **Status Indicator** turns on and the current Ringtone will be played. There are 3 options to choose from:

00 - Mute; 01 - Tune (default); 02- English (voice Annunciation)

2. Press key A to select

3. Press Key B to exit

- **Ringtone Volume Setting**

1. Press Key B to enter Ringtone **Volume Setting**, the **Talk indicator** turns on and plays the tune at the current volume

2. Press Key A to increase/decrease volume

3. Press Key B to exit

If door station has TFT screen connected, the current **Volume** and changes will be visible on the screen

- **Talk Volume Settings**

1. **During conversation**, press and hold Key B for 3 seconds to enter the **Talk Volume Setting.** The **Talk indicator** turns on with beep sound

2. Press Key A to increase/decrease volume

3. Press Key B to exit

3. Restore to Factory Default

Attention: All changes and settings will be deleted if **Restore Factory Default** is activated. Includes the modules settings, such as Proximity module, Keypad module (even if the modules are not connected to **the Camera Module)**

When in standby, short out the **Exit Button Port(EB+,EB-)**, then continuously toggle the DIP-6 switch 4 times until beep sound and all three Indicators will blink at the same time. This means the **Restore Factory Default** is in progress. When all three Indicators turns off with a beep sound, the **Restore Factory Default** is complete

KEYPAD MODULE

1. Parts and functions

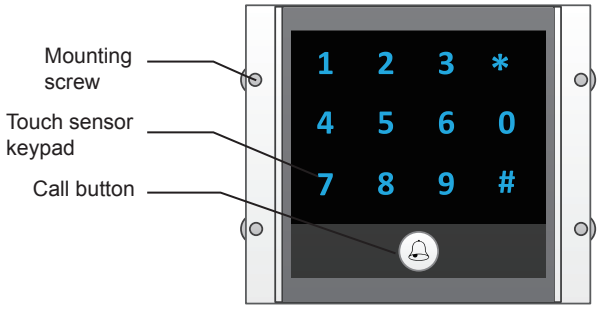

2. Keypad operation

- **Call Residents**

Type in Apartment number directly, touch 🔔 to call

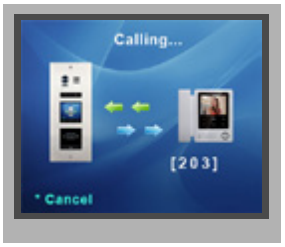

- **Password Unlocking**

Input **# password #** to unlock the door

Note: Default Master Code is not a password for unlocking! There isn't one by default. Please create it. See 'Setting Password for User Group1 (means for Unlocking Lock 1. If two locks are connected, create password User Group2 for unlocking second lock)

- **Parameters Setting**

To be able to change any default settings go first into Programming Mode by typing in **# Default Master Code 1234 #** and type in the corresponding codes. Touch ⁎ to exit the Setting Mode

- **Keypad Version Standby screen**

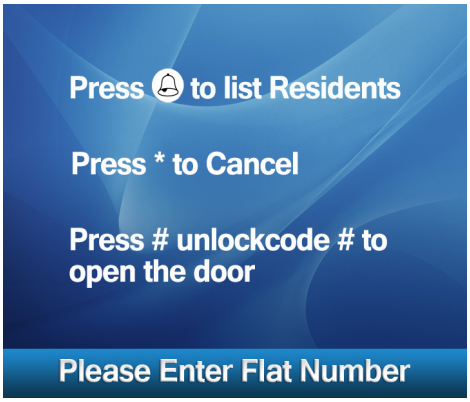

- **Programming Codes Tables**

Setting items	Setting range	Default value	Setting code
Reset all settings	1,2,3,4	-	00
Setting the master code	1 ~ 12 digits Valid keys:0 ~ 9	1234	01
Setting the key illumination time	10 to 99 seconds/ continually lit	10 sec	02
Setting the unlock time	01 to 99 seconds	1 sec	03
Setting the unlock mode	0:opened/1:closed	opened	04
Operation tone settings	0(on),1 (off)	on	05
Reset code settings	1,2,3,4	-	06
⁎&# function settings	0:Normal/1:Reverse	Normal	07
Call tone settings	0:Enable/1:Disable	Enable	08
Interference resistant grade settings	Valid keys:0 ~ 5	2	09
SPK Adjustment	Valid keys:0~9	5	11
Night light level	Valid keys:0 ~ 5	4	13
Reserve	Reserve	Reserve	14~17
Setting password forTemporary1	1 ~ 12 digits Valid keys:0~9	-	18
Setting password forTemporary2	1 ~ 12 digits Valid keys:0~9	-	19
Setting password for user group1	1 ~ 12 digits Number of codes:40 Valid keys:0~9	-	**20~59**
Setting password for user group2	1 ~ 12 digits Number of codes:40 Valid keys:0~9	-	60~99

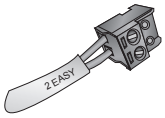

Type in the master code
(Default: # 1 2 3 4 #)

Beep+, Beep

1.Reset all settings	2.Setting Master Password (Default：1234)	3.Setting the key illumination time (Default：10s)	4.Setting unlocking time (Default：1s)
Type in the setting code 00+#	Type in the setting code 01+#	Type in the setting code 02+#	Type in the setting code 03+#
Beep+, Beep	Beep+, Beep	Beep+, Beep	Beep+, Beep
Type in 1234+#	Type in new master password (ex.: 4321)(1~12 digits) 4321+#	Type in code (ex.: 10) range:00 or 10~99 10+#	Type in code (ex.: 09) range:01~99 09+#
Beep+	Beep+	Beep+	Beep+

- **When the " * cancel" key is pressed, the indicator will show its standby color, the buzzer beeps, and the system exits the setting mode**
- **When there isn't any operation for 10s, the buzzer beeps, and the system exits the setting mode**
- **When setting failure, the buzzer beeps**

Beep, Beep+

- All settings will restore to their default values
- When power on or activate 'Reset all settings',the keypad checking will carry out, during this time,the key illumination will blink and the touch operation is not possible. When finished, keys illumination will stop blinking and long beep will sound

- The master password is allowed 1~12 digits. The user password can not be the same as master password. It is recommended that you change the default master password

- If the key illumination time is set to 00, key illumination will stay lit at all times
- If the key illumination time is set to 10~99, key illumination will light up for 10~99 seconds before turning off. Default is 10 seconds

- The unlocking time can be set on either video monitor or door station, and the valid value is the number you set last

Type in the master code
(Default: # 1 2 3 4 #

Beep+, Beep

5.Setting the unlock mode (Default：0(Opened))	6.Setting operation tone (Default：ON)	7.Reset code setting	8.*&# function setting (Default：Normal)
Type in setting code 04+#	Type in setting code 05+#	Type in setting code 06+#	Type in setting code 07+#
Beep+, Beep	Beep+, Beep	Beep+, Beep	Beep+, Beep
0/1	0/1		0/1
Type in code 0 or 1 0:(NO) / 1:(NC) 1+#	Type in code 0 or 1 0:(on) / 1:(off) 1+#	Type in code 1234+#	Type in code 0 or 1 0:(default) / 1:(reverse) 1+#
Beep+	Beep+	Beep+	Beep+

- **When the " * cancel" key is pressed, the indicator will show its standby color, the buzzer beeps, and the system exits the setting mode.**
- **When there isn't any operation for 10s, the buzzer beeps, and the system exits the setting mode.**
- **When setting failure, the buzzer beeps.**

Beep, Beep+

- The unlock mode can be set on either monitor or door station, and the valid value is the number you set last

- When the operation tone is set to 0, keyboard clicks are sound
- When the operation tone is set to 1, keyboard clicks are silent

- Cancel all passwords except master password
- Restore the master password to a default 1234

- When is set to 0, * button is to cancel the input, # button to confirm the input.
- When is set to 1, # button to cancel the input, * button to confirm the input

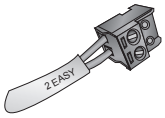

Type in the master code
(Default: # 1 2 3 4 #

Beep+, Beep

9. Call tone setting (Default：enable)	10.Interference resistant grade setting (Default：2)	11.SPK volume adjust setting (Default:4)	12.Night light level setting (Default：4)
Type in setting code 08+#	Type in setting code 09+#	Type in setting code 11+#	Type in setting code 13+#
Beep+, Beep	Beep+, Beep	Beep+, Beep	Beep+, Beep
0/1			
Type in 0 or 1 0(enabled) / 1(disabled) 1+#	Type in range:0~5 3+#	Type in range:0~9 5+#	Type in range:0~5 3+#
Beep+	Beep+	Beep+	Beep+

- **When the " * cancel" key is pressed, the indicator will show its standby color, the buzzer beeps, and the system exits the setting mode.**
- **When there isn't any operation for 10s, the buzzer beeps, and the system exits the setting mode.**
- **When setting failure, the buzzer beeps.**

Beep, Beep+

- If set to 0, ringtone will be present when pressing the "CALL" button.
- If set to 1, no ringtone when pressing the "CALL" button

- The larger you set the interference resistant grade, the stronger it will be,but the sensitivity of the keypad will be lower.
- The interference resistant grade setting also will activate the keypad checking

- Unlock via password is still available even when the door station is talking state.
- When door station is talking, you can enter the Master code (the LED turns white upon that) to activate the volume adjusting Speaker adjustment: 3 (up), 6 (down)

- Night Light Level: 0~5
The higher the number, the brighter the lights

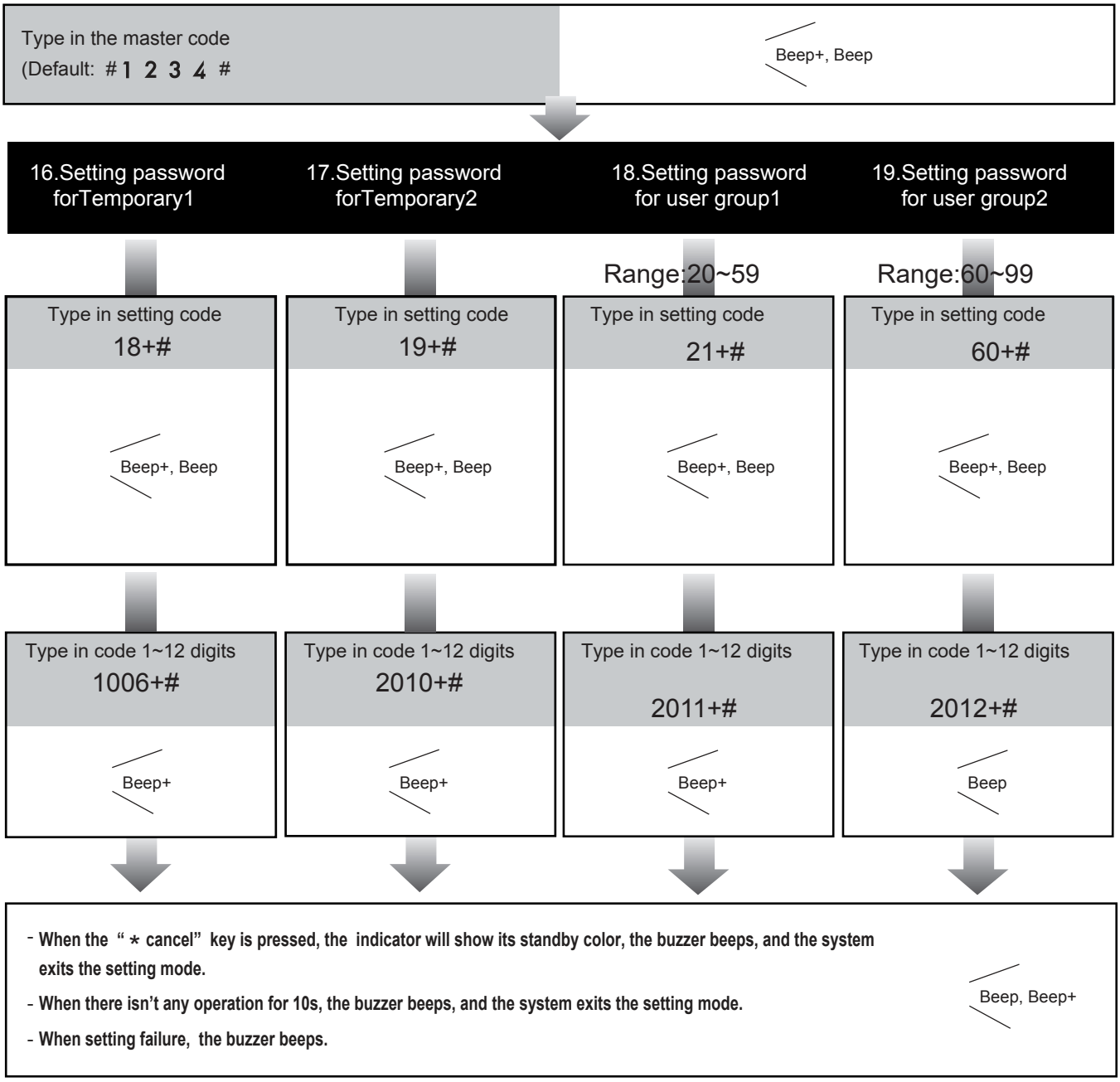

- **When the " * cancel" key is pressed, the indicator will show its standby color, the buzzer beeps, and the system exits the setting mode.**
- **When there isn't any operation for 10s, the buzzer beeps, and the system exits the setting mode.**
- **When setting failure, the buzzer beeps.**

Beep, Beep+

- The temporary password is for one time use and valid for 60 seconds in case first attempt was unsuccessful .
- The temporary1 is used to release the first lock,and the temporary 2 is used to release the second lock (the second lock need an additional RLC Lock Control Interface)
- If the password length exceeds 12 digits, the Keypad module will make multiple short beep sounds "beep,beep,beep,beep"- Failed

- The temporary password can not be the same as the master password and the user password

- The user code group1 is used to release the first lock,and the user code group2 is used to release the second lock (the second lock need an additional RLC lock control Interface).
- The user code group1 and user code code group2 can contain 40 group passwords each
- If the password length exceeds 12 digits, the Keypad module will make multiple short beep sounds "beep,beep,beep,beep" -Failed
- The user password can not be the same as the master password and temporary password

TFT SCREEN MODULE

1. Parts and functions

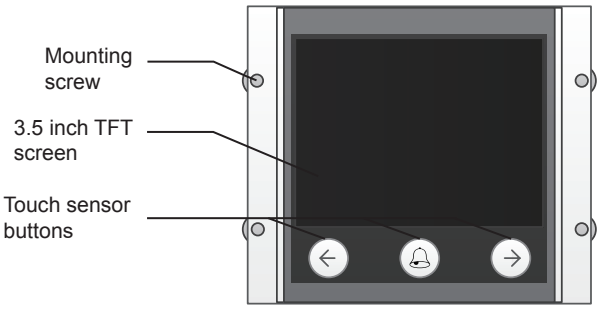

2. Features

- Calling via Namelist
- 3.5 inch TFT display
- Operation visualisation
- With three touch buttons
- Updates of Namelist via SD Card

3. Functions

- **Proximity Reader Version Standby screen**

- **Name List Calling**

In standby mode, press 🔔 to show the Name list. Press ← or → to select name. After that, press 🔔 to call the Resident

- **Calling Display**

This is the screen of calling process

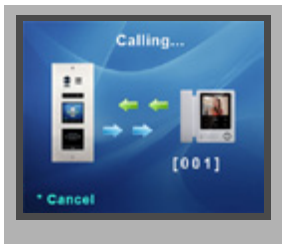

- **Conversation**

This is the screen of conversation process

- **Keypad operation**

i) When in standby mode, input the number by pressing keypad, the room number will be showed on screen.

ii) When in standby mode, press # key,a password will be asked. This is the user interface of password input.

iii) When input admin code,a **Setting Code** will be asked on TFT screen.

- **Combination with ID module**

When registered ID card will be presented to a Proximity Reader, “Door open” message will be showed on TFT Display Module screen

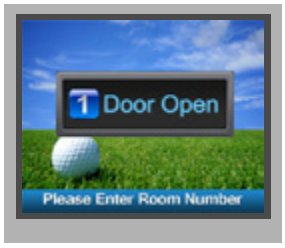

This is the user interface of adding card, please know that the user interface of delete card or initialisation is similar as the following picture shows

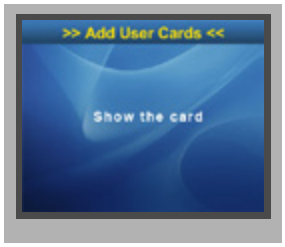

PROXIMITY READER MODULE

1. Parts and functions

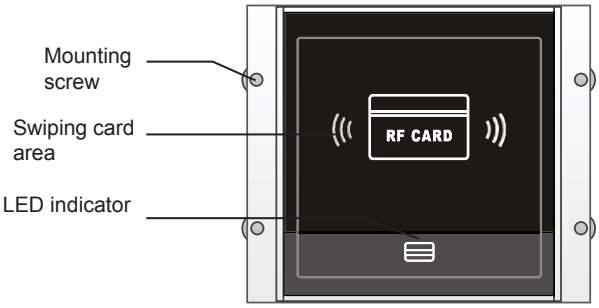

2. Features

- Up to 320 user cards can be registered by door station
- Easy management with indicators and sounds
- Two **Master Cards** are supplied, one **MASTER CARD ADD** and one **MASTER CARD DELETE**
- The distance of card reading is 3 to 5 cm
- The **Master Cards** are necessary when you add or delete user cards. Please keep them safe for future use
- It is possible to create new **Master Cards** if original were lost. The old ones become invalid automatically

3. Creating new Master Cards

Power On and short together EB+ and EB- ; Double beep “BP+” will sound and the **Unlock indicator** will come on

Toggle DIP4 switch four times: Up-Down, Up-Down; Double beep “BP+,BP” will sound, the **Talk indicator** and the **Unlock indicator** will come on

Show the new, to be **Master ADD CARD**, beep “BP+” will sound, the **Unlock indicator** will come on

Show the new, to be **Master DELETE CARD**, beep “BP+” will sound, and all indicators will turn off. System will exit the **Master Card Setting** mode automatically after 10s

- **Registering User Cards/Fobs**

To register/delete User fobs you will need **Master Add/Delete** fobs

i) Register User Cards/Fobs

In standby, show the **Master Card ADD**, double beep “BP +,BP” will sound, the **Talk indicator will** turn on

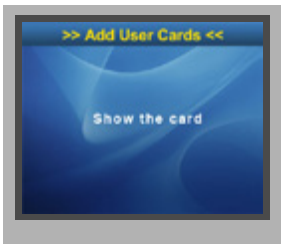

Show blank **User Cards**, one by one. Beep sound “BP+” and the **Talk indicator** blink- means success. Double Beep means failure, please repeat process once again

Show the **MASTER CARD ADD** to exit Add User Card Mode or it will exit automatically after 10s of no activity

ii) Delete User Cards/Fobs which are present

In standby, show the **Master Card DELETE**, double beep “BP+,BP” will sound, and the **Unlock indicator** will turn on

Show **User Cards** you want to delete. Beep “BP+” will sound, and **Unlock indicator** blinks once. You can continuously show user cards that you need to delete

Show the **MASTER CARD DELETE** to exit **Delete Card Mode** or it will exit automatically after 10s of no activity

If cards/fobs are not present, lost for example, there is a way to delete them from Proximity Reader registry. Please see next section

iii) Clear History of All Ever Registered Cards/Fobs

In standby, show the **Master Card Delete**, double beep “BP +,BP” will sound, and the **Unlock indicator** will turn on

Show the **Master Card ADD**, double beep “BP+,BP” will sound, and the **Talk indicator** and the **Unlock indicator** will turn on

Show the **MASTER CARD ADD** again,the **Talk indicator** and the **Unlock indicator** will blink. Wait until long beep “BP” will sound. All registered cards/fobs were deleted. System will return to standby automatically in 10 seconds

4. Door Station with Proximity Reader and TFT Screen Modules

Screen used to call residents
Proximity Reader - to open lock with cards/fobs

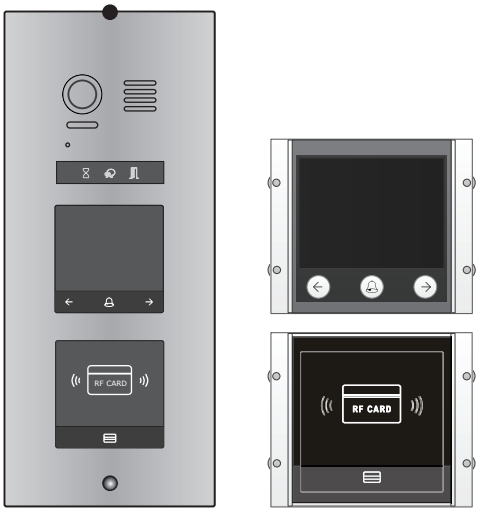

Scrolling information screen. Explains the actions required to call a resident clearly and simply. Indicates how to choose the resident via touch sensitive icons

- **Combination With Keypad Module**

1) Master Card Setting(Reserve)

2) Add Card Setting(Reserve)

2) Delete Card Setting(Reserve)

- **Combination With Keypad & TFT Modules**

DIRECT CALL BUTTONS MODULE

1. Parts and functions

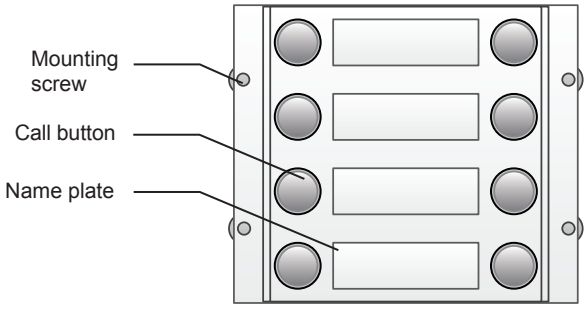

Double row call button module

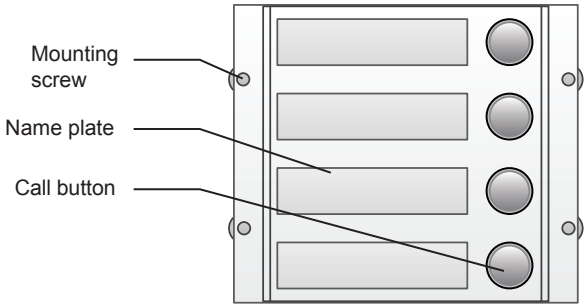

Single row call button module

2. Call codes

Call codes for each button are pre-programmed by default. Button with Code 1 will call Video Monitor with Address 01.00.
Regardless of the structure of the call button module, the numbers are listed from the top to bottom and from left to right

Keep DIP-3 Off for double row buttons (default)

- DIP-3 switch set Off

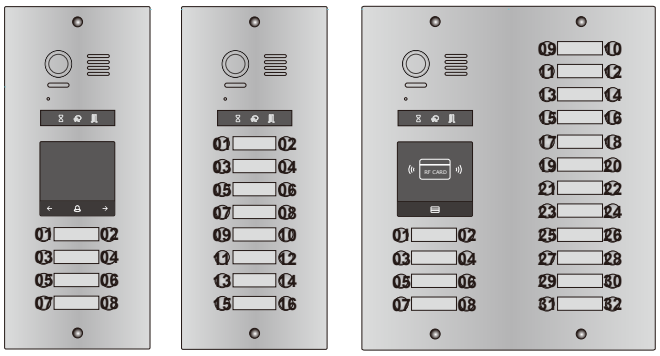

Keep DIP-3 On for single row of buttons (default)

- DIP-3 switch set On 

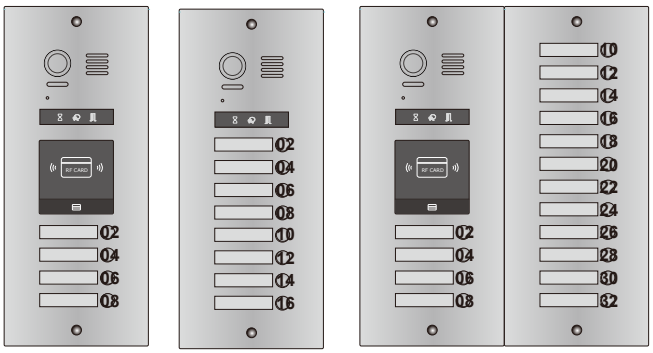

3. Addresses

NO.	Functions
01	Call Monitor with Address 01.00
02	Call Monitor with Address 02.00
03	Call Monitor with Address 03.00
04	Call Monitor with Address 04.00
05	Call Monitor with Address 05.00
06	Call Monitor with Address 06.00
07	Call Monitor with Address 07.00
08	Call Monitor with Address 08.00

TERMINAL DESCRIPTION

- **Video Module**

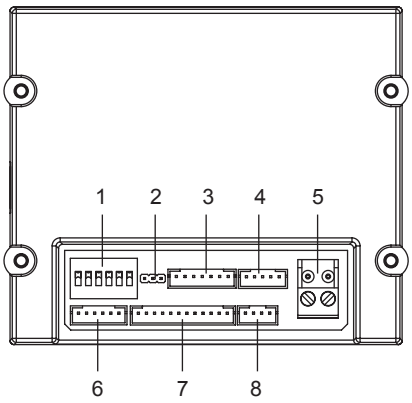

NO.	Name	Descriptions
1	SET	DIP switches for system configuration
2	JP-LK	Electric lock mode setting
3	CN/KMB	Call Button Module connection port
4	CN/T-COIL	Reserved
5	Bus	No-polarity bus line,connect to power supply
6	CN-LK	Electric lock and exit button connection port
7	CN/FUN	Keypad Module or TFT Screen Module connection port
8	CN/WGN	Card Reader Module connection port

- **Keypad and TFT Screen Module**

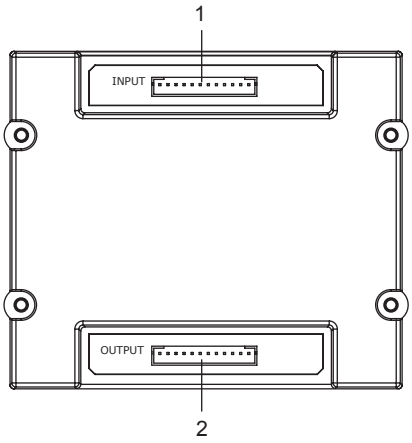

NO.	Name	Descriptions
1	CN/FUN_IN	Connect to CN/FUN of Video Module
2	CN/FUN_OUT	Connect to next Keypad or TFT Module

- **Card Reader Module**

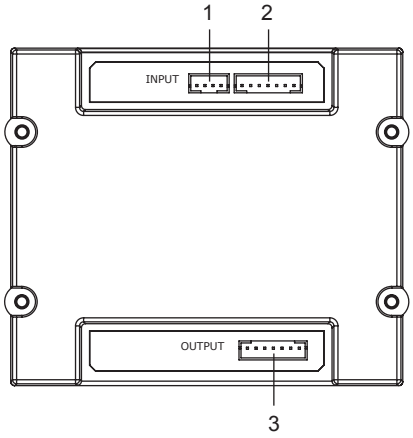

NO.	Name	Descriptions
1	JWGN1	Connect to CN/WGN of Video Module
2	JKB'	Connect to next Call Button Module
3	JKB	Connect to next Call Button Module

- **Call Button Module**

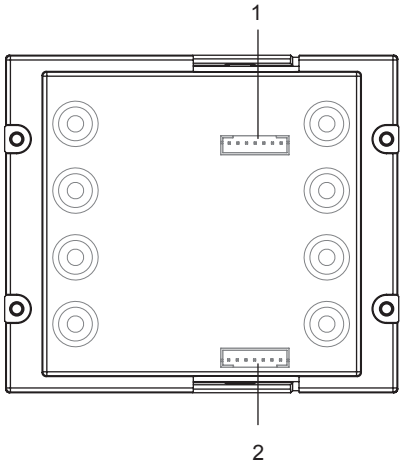

NO.	Name	Descriptions
1	INPUT	Connect to CN/KMB of Video Module
2	OUTPUT	Connect to next call Button Module

CONNECTIONS

- **DMR21/D16**

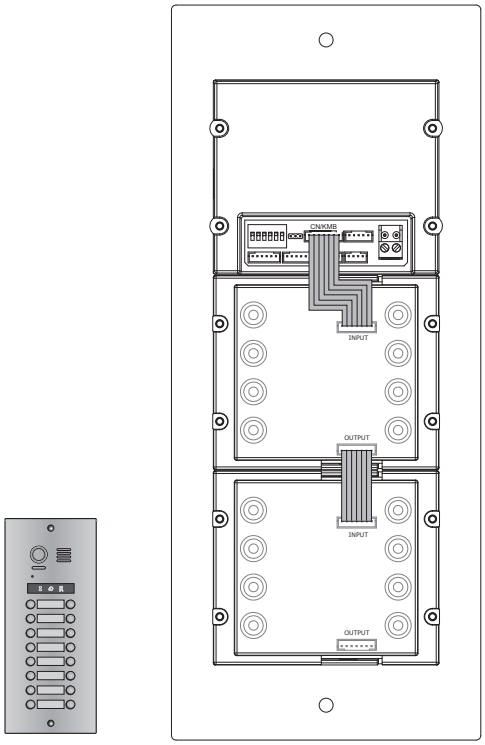

- **DMR21/T4/D8**

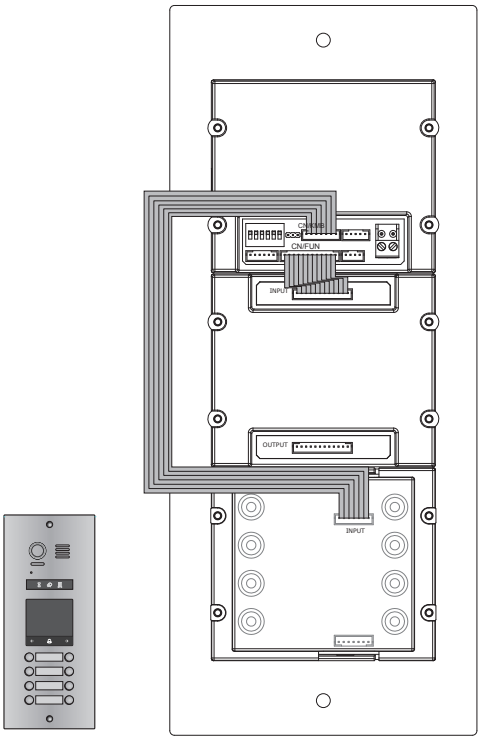

- **DMR21/ID/S4**

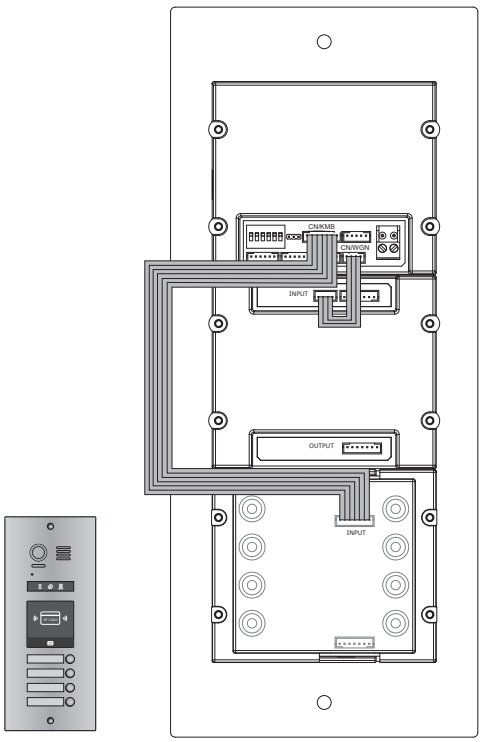

- **DMR21/ID/KP**

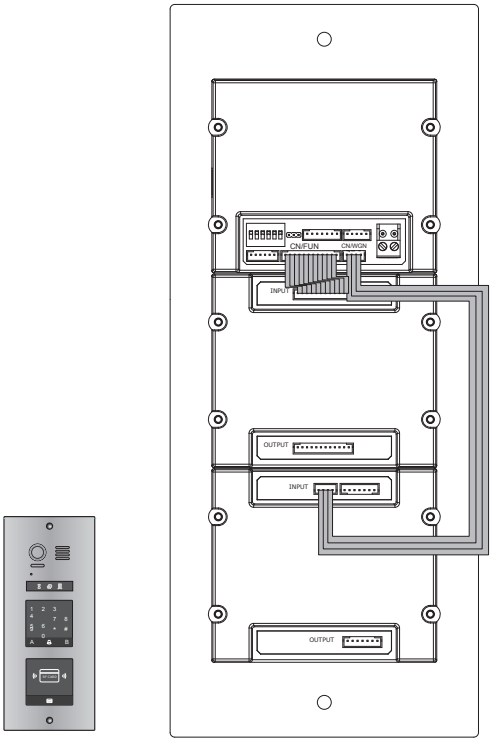

- **DMR21/S8+F3**

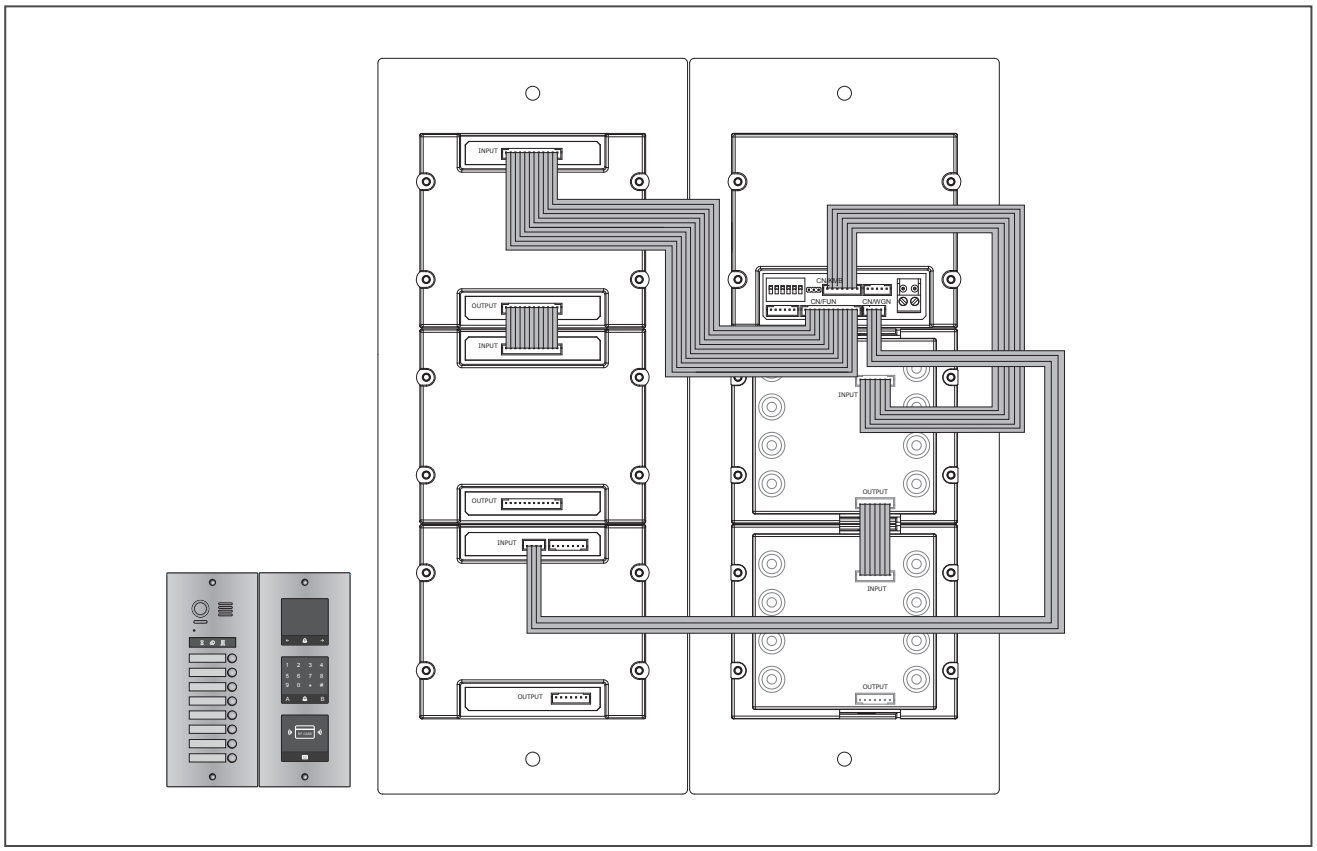

- **DMR21/ID/KP**

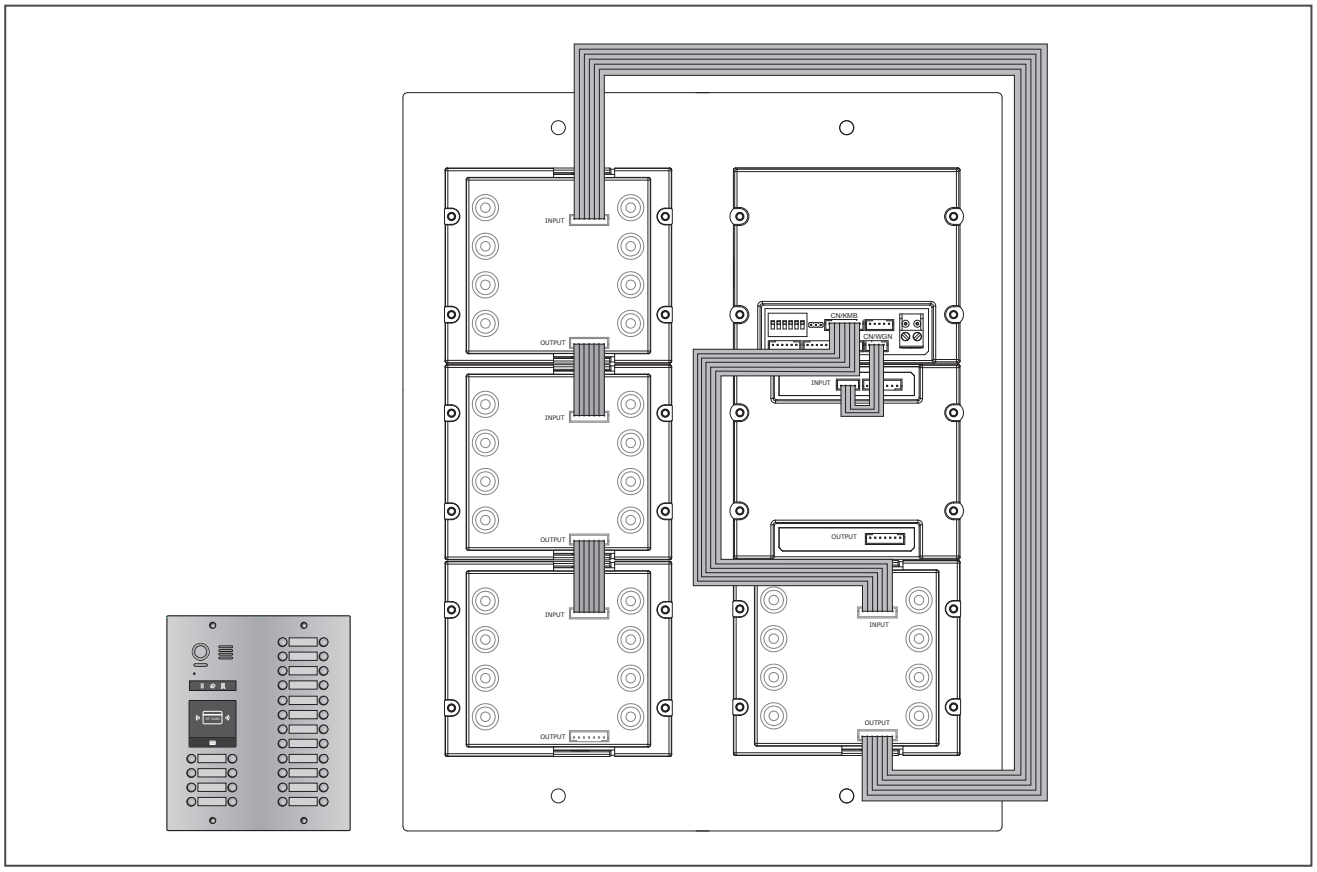

DOOR STATION SETTINGS

1.Namelist Creation

TFT Screen Module has an option to upload a Residents List information. This is done with Micro SD card. This Residents list can be modified later on if needed

1. On the PC or laptop, create a TXT file, and name it **Namelist**

Enter your data in the following format:

[01][Apartment 1 dial 01][00][00][01]

[02][Apartment 2 dial 02][00][00] [02]

[03][Apartment 3 dial 03][00][00][03]

[04][Apartment 4 dial 04][00][00][04]

[05][Apartment 5 dial 05][00][00][05]

[06][Apartment 6 dial 06][00][00][06]

NOTE: Number of characters available to type in is limited to 37

First number in brackets is the order in which list appears on a screen

Middle info in brackets- this is what will be visible on the screen. This file is for Door Station with Keypad Module. Proximity Reader version doesn't have means to dial, so it should read: Apartment 1

Last number in brackets- Address of the Video Monitor

2. Format Micro SD card

3. Create Folder in the SD card and call it **Namelist.bin**

4. Put your txt file into the Folder. Your SD card is ready

5. Install SD card into a slot located on the left hand side of Video Module but do not click in as yet

6. Power Off Door Station and wait for a minute or so. Power it back On and flip DIP-6 to On position and immediately click-in SD card. Upload should start right away. Wait until it finishes and second long beep sounds. Remove SD cars and flip DIP-6 back into Off position

A long beep sounds and **Talk indicator** is turned on

After 20 seconds, a long beep sounds, and **Talk indicator** is turned off. **Namelist upload/update** is finished

DIP6=ON

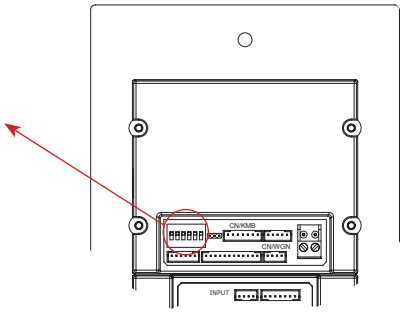

Troubleshooting when uploading Namelist

1. I uploaded namelist but when I checked, message says 'No File'

Check Namelist file for errors, i.e. number of digits exceeds 37 or missing bracket, or missing number. The file must be EXACTLY as shown in an example with no space between lines

Format SD card, there could be some extra invisible data on it. If nothing helped, take another SD card because some of them just not compatible

2. Upload never started

Make sure DIP-6 was switched On
Make sure that all procedure was done in short time after powering On the Door Station
Repeat everything once again and start from powering Off/ powering On

SOFTWARE UPDATE

1. Format SD card

2. Copy Update.bin file to micro SD card on PC or laptop

3. Upload software update into Door Station

a) Power Door Station On and flip DIP-6 to ON position

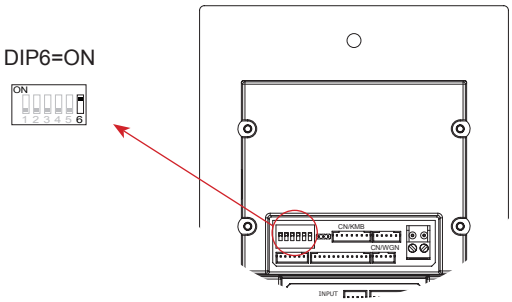

b) Insert SD card into the slot

c) A long beep sounds, and the **Status indicator** is turned on

d) After 3 seconds, all the indicators are turned on

f) After 20 seconds, a long beep sounds, and all indicators are turned off. **Software update** is finished. Flip DIP-6 to Off position

RINGTONE UPDATE

1. Format SD card

2. Copy the Update Ring.bin file to micro SD card on PC or laptop

3. Upload software into Door Station

a) Power Door Station On and flip DIP-6 to ON position

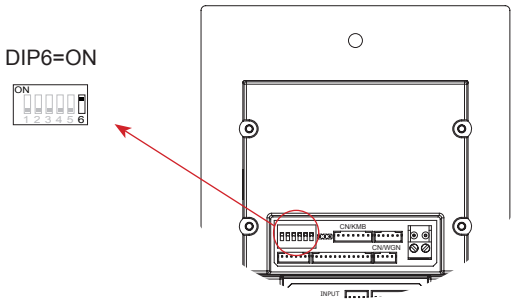

b) Insert SD card into the slot

c) A long beep sounds, and the **Talk indicator** is turned on

d) After 20 seconds, a long beep sounds, and the **Talk indicator** is turned off. **Ringtone update** is finished. Flip DIP-6 to Off Position

Screen Shots of Functions in Progress

- **Calling By Namelist**

Touch icon on the TFT Screen to display Residents List

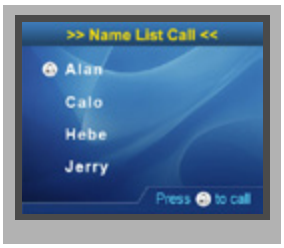

Select the name and touch icon to call

- **Calling By Keypad Module**

Type in Apartment number on the Keypad and touch sensor button to call the corresponding monitor

- **Screen shot of Answered Call**

- **Screen shot of Unlock Function**