Door Station DT591/592

2-wire series

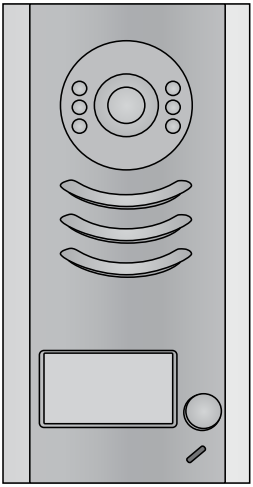

DT591

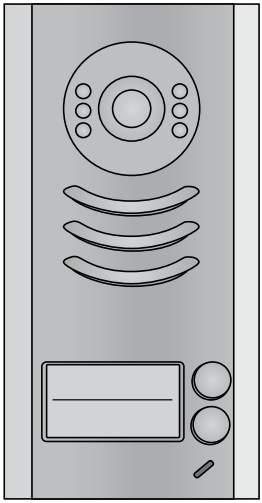

DT592

CONTENTS

1.Parts and Functions..... 1
2.Terminal Descriptions 1
3.Door Station Specifications 2
4.Mounting 2
4.1 Mounting Without Rain Cover 2
4.2 Mounting With Rain Cover 3
4.3 Placing Name Label 3
4.4 Adjusting Camera Angle 4
5.System Wiring and Connections 4
5.1 Basic Connection..... 4
5.2 Electric Lock Connection 5
5.2.1 Electric Power-on-to-open locks connection..... 5
5.2.2 Magnetic Power-off-to-open locks connection..... 5
5.2.3 How to setup the unlock parameters via Monitor 6
5.3 Multi Door stations Connection.....7
5.4 Multi Monitors Connection 8
5.4.1 Basic daisy chain connection..... 8
5.4.2 Star connection with DBC4S..... 9
6.Setup 10
6.1 Door Station DIP switches settings.. 10
6.2 Video Monitor DIP switches setting.....10
7. Cable Requirements.....12
Warranty Card..... 13

1.Parts and Functions

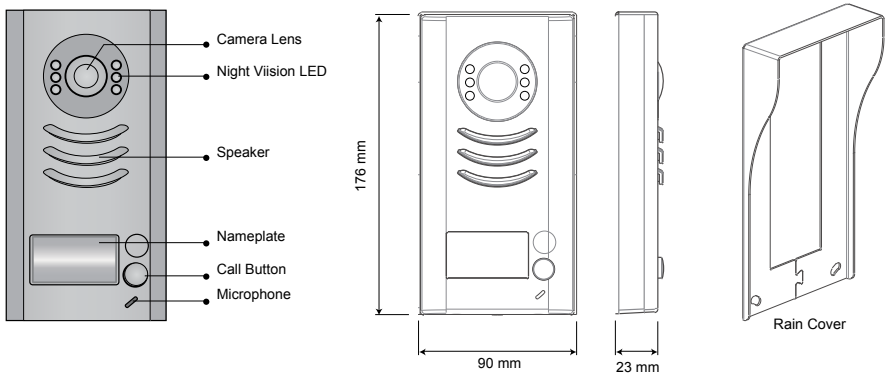

DT592 with 2-call buttons shown

2.Terminal Descriptions

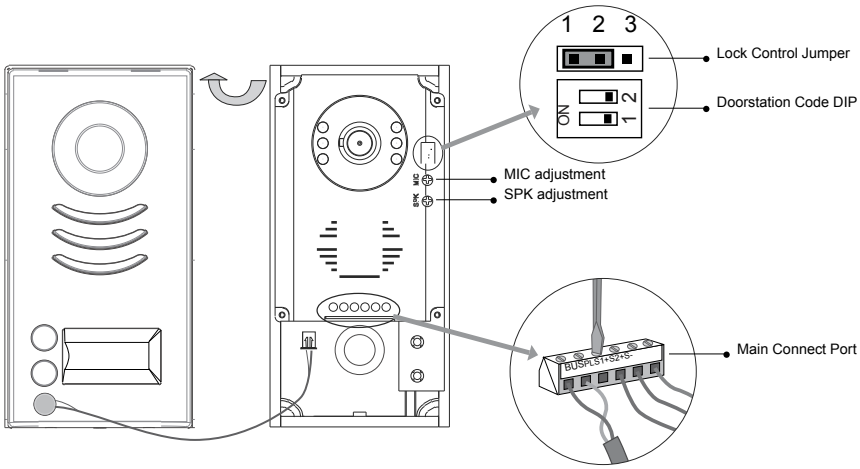

•**Lock Control Jumper:** Keep or remove the Jumper for different types of electric locks- see 5.2.1 , 5.2.2
•**Doorstation Code DIP switches:** To set the address for multiple door stations -see 6.1
•**Main Connect Port:** To connect the bus line and the electric locks
• BUS: Connect to the bus line, **NO POLARITY**
• PL: External lock power input, connect to the power positive (power +)
• S1+, S2+: Lock power(+) output, S1 is for first lock, S2 for second lock
• S-: Lock power(-) output, connect to the power(-) input of locks only when locks are powered via Door Station

3.Door Station Specifications

Resolution:	> 450 TV Lines
Night Vision:	0.1LUX with white LED
Lock Power supply:	12Vdc, 300mA (Internal Power)
Power Consumption:	1W in standby, 12W in working
NO, COM dry contact:	Max. 48V dc 1.5A
Unlocking time:	1 to 9 sec, set by Video Monitor
Working temperature:	-10ºC ~ 45ºC

4.Mounting

4.1 Mounting Without Rain Cover

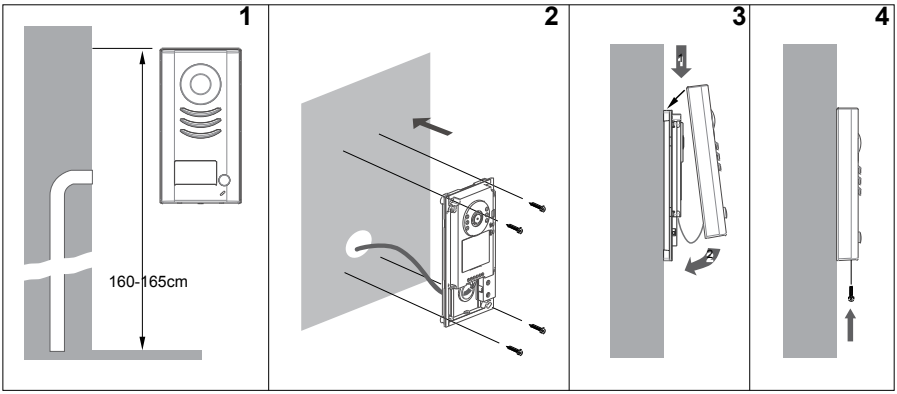

4.2 Mounting With Rain Cover

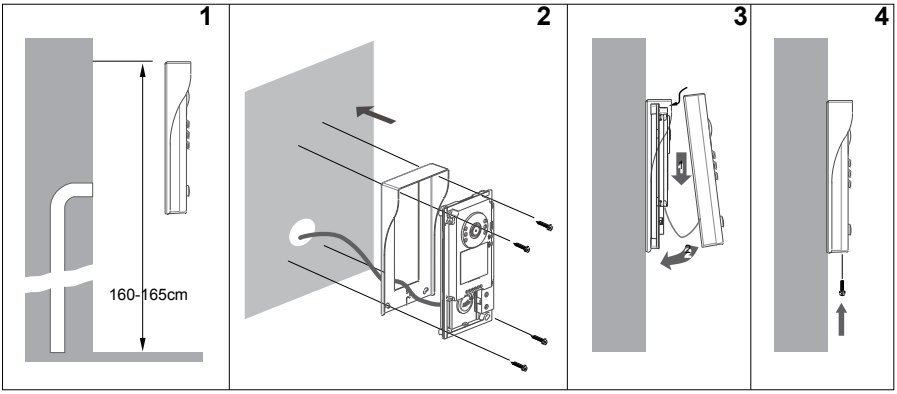

4.3 Placing Name Label

Move the plastic cover away to open the transparent name label cover, insert a paper, then put the plastic cover back

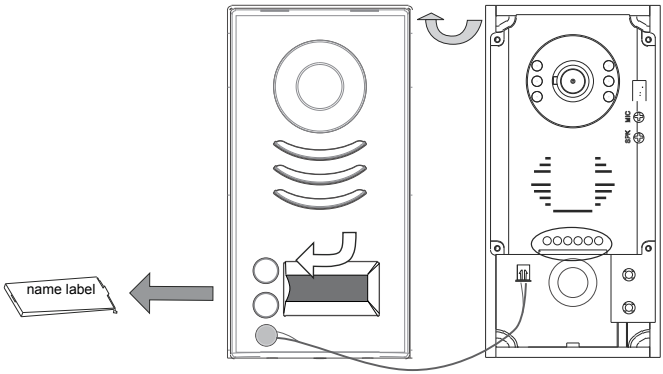

4.4 Adjusting Camera Angle

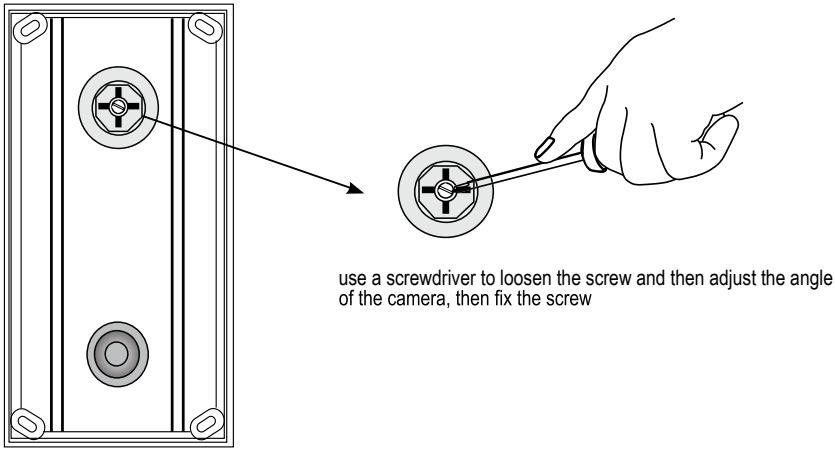

5.System Wiring and Connections

5.1 Basic Connection

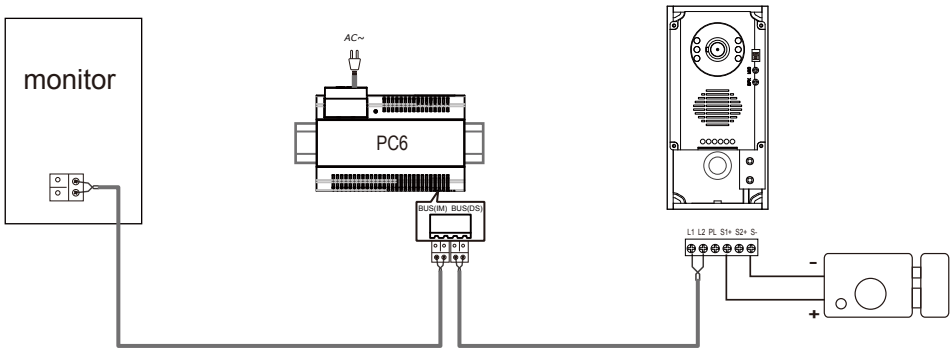

5.2 Electric Lock Connection

5.2.1 Electric Power-on-to-open lock powered by the system

1. Only Power-on-to-open electric locks can be connected
2. The lock is limited to 12V, and holding current must be not more than 250mA
3. The door lock control is not timed when Exit Button used
4. The **Unlock Mode** parameter must be set to 0 (default) via Video Monitor

connect one lock

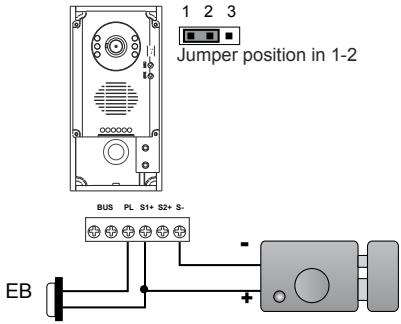

connect two locks

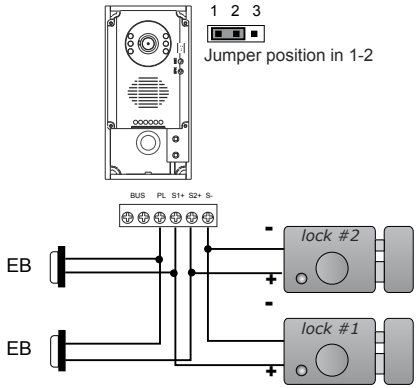

5.2.2 Magnetic Power-off-to-open lock

1. The external power supply must be used according to the lock specifications
2. The inside relay contact is restricted to AC or DC 24V/3A
3. The jumper must be taken off
4. The **Unlock Mode** paramenter must be set to Mode 1 via Video Monitor

connect one lock

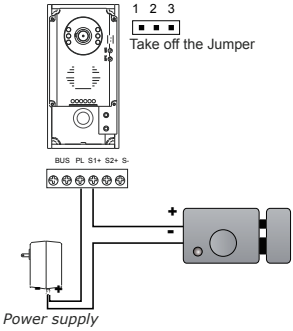

connect two locks

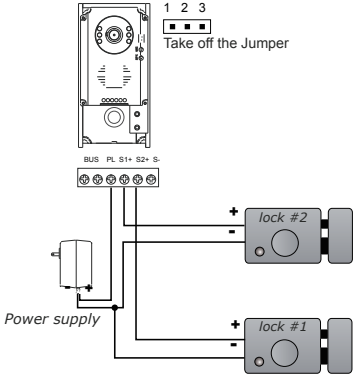

5.2.3 Unlock Mode parameter and Unlocking time

Unlock Mode parameter and Unlocking time must be set according to the connected lock:
Mode 0 for Power-on-to-open locks
Mode 1 for Power-off-to open electric, and all magnetic locks

Connect the whole system including the lock, and power it up.
On any of video monitor touch “About” or “Intelligent Home” icon. Page with software info will open
Touch and hold screen and then go to “Installer Setup”

Using digital keypad, type in:
8010 # for Mode 0 (Power-on-to-open locks)
8011 # for Mode 1 (Power-off-to-open electric and all magnetic locks)

Door station will make a confirmation beep

Next step, set the Unlocking time
Using digital keypad, type in:

8020# unlocking time set to 0 sec
8021# 1 sec
8022# 2 sec
8023# 3 sec
8024# 4 sec
8025# unlocking time set to 5 sec
8026# 6 sec
8027# 7 sec
8028# 8 sec
8029# unlocking time set to 9 sec (maximum)

Door station will make confirmation beep and all new settings are synced

Note: For multiple monitor systems there is no need to do setting on all of the monitors, one of them is sufficient

5.3 Multi Doorstations Connection

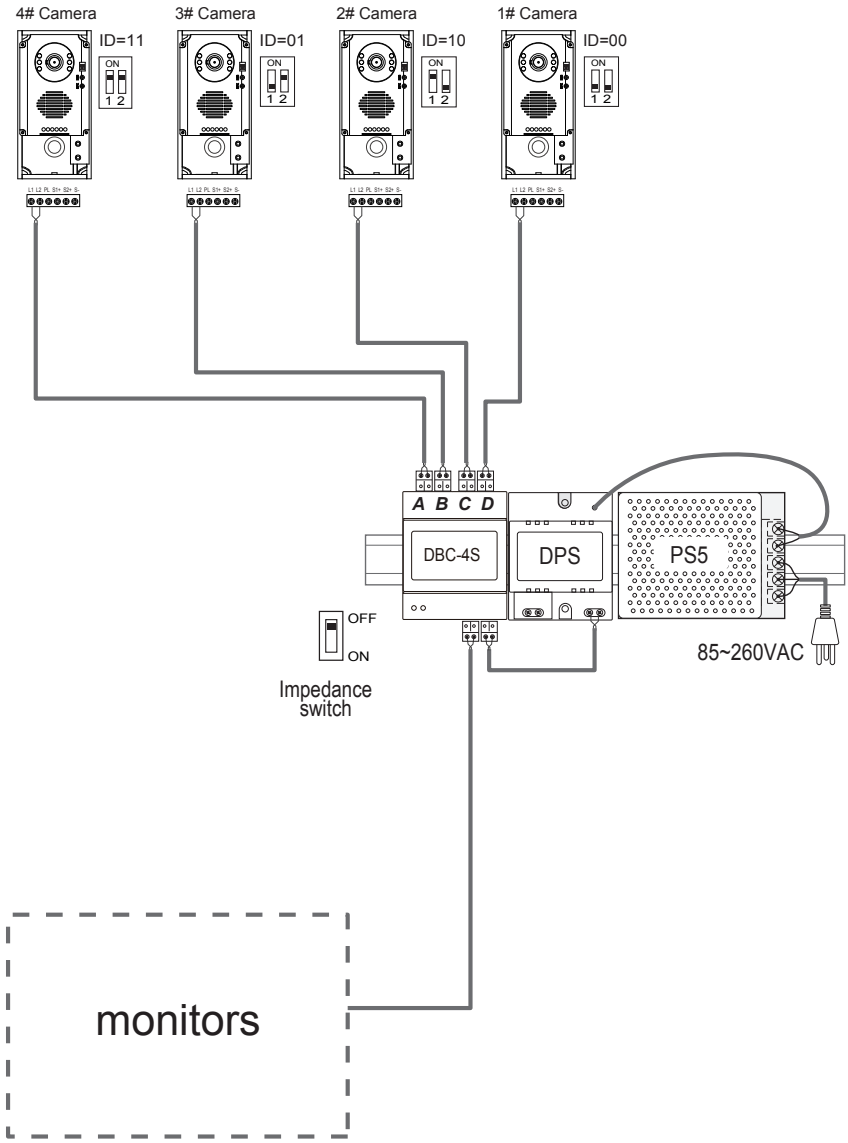

5.4 Multi Monitors Connection

5.4.1 Basic Daisy Chain Connection

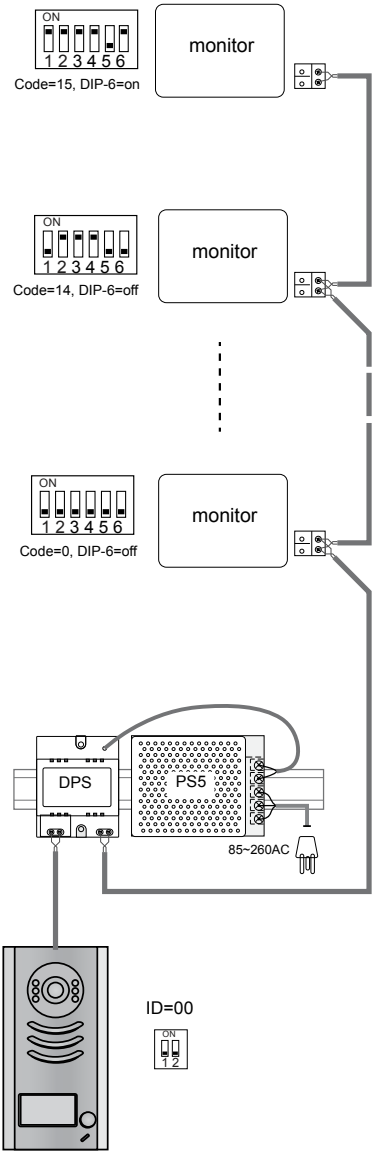

5.4.2 Star Connection with DBC-4S distributors

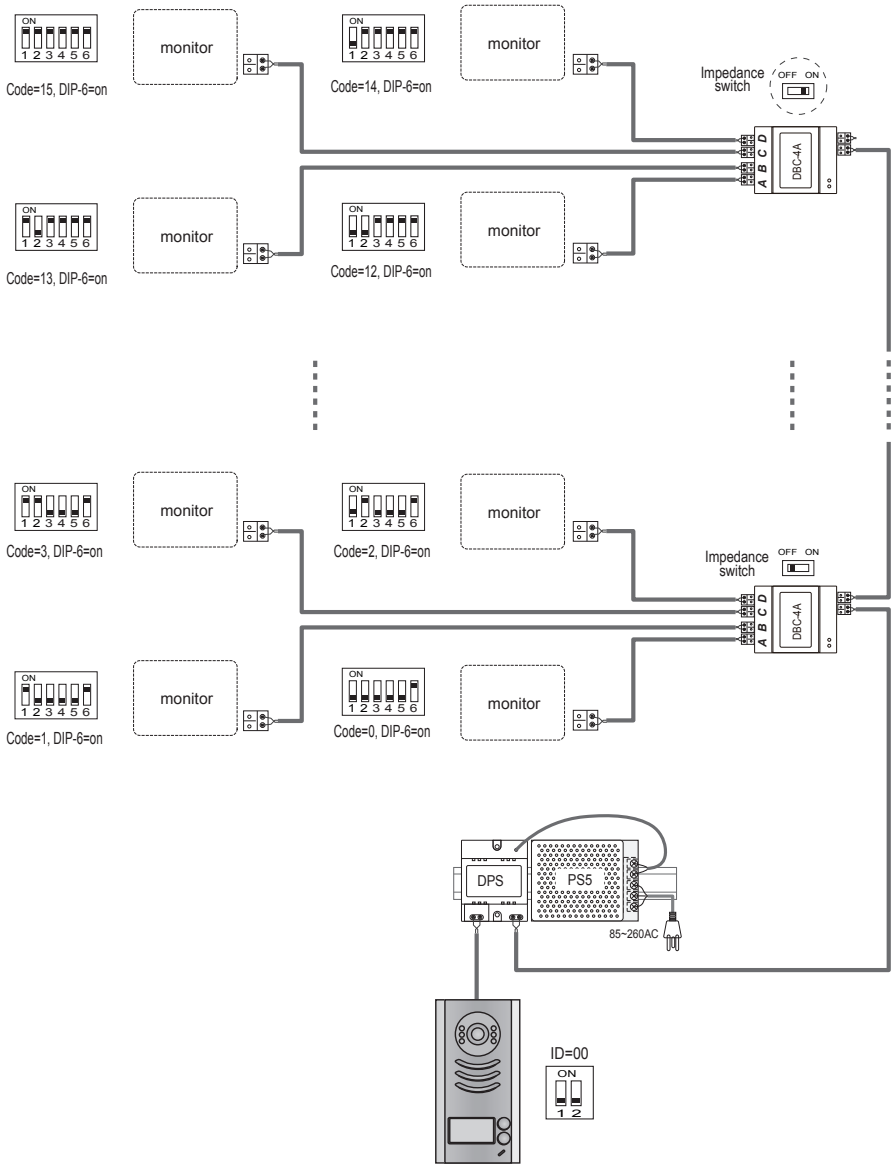

6. Setup via DIP switches

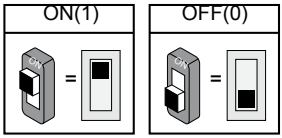

6.1 DIP Switches Settings of Single and Multiple Doorstations

There are 2 DIP switches to configure addresses for up to a 4 x Door Stations

Dip state	Door Station ID
ON 1 2	Default ID = 0 (00) for the first Door Station
ON 1 2	ID = 1(10) for the second Door Station
ON 1 2	ID = 2(01) for the third Door Station
ON 1 2	ID = 3(11) for the fourth Door Station

6.2 DIP Switches Settings of Video Monitors

There are 6 DIP switches on the rear of Video Monitor and they are used to configure the User Code for each Monitor

Use **Tables** on page 11 for programming monitor User Codes

DIP switch 6 is END of LINE switch, which have to be set ON if the Monitor is in the end of the line (bus), otherwise set OFF

Dip state	Setting	Dip state	Setting
OFF ON 1 2 3 4 5 6	The monitor is not at the end of the line	ON ON 1 2 3 4 5 6	The monitor is at the end of the line

USER CODE TABLE

DIP switches 1-5 are used to give unique address - USER CODE to each video monitor in the system

Bit state	User Code	Bit state	User Code	Bit state	User Code
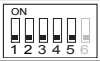	Code=0		Code=11	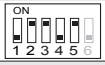	Code=22
	Code=1		Code=12		Code=23
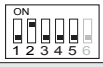	Code=2		Code=13	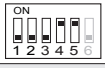	Code=24
	Code=3		Code=14		Code=25
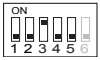	Code=4		Code=15	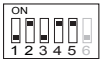	Code=26
	Code=5		Code=16		Code=27
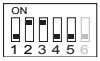	Code=6		Code=17	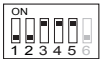	Code=28
	Code=7		Code=18		Code=29
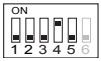	Code=8		Code=19	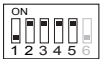	Code=30
	Code=9		Code=20		Code=31
	Code=10	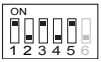	Code=21		

Button A will call Video Monitors with User Codes 0 -15

Button B will call Video Monitors with User Codes 16 to 31

7.Cable Requirements

This system transmits video and audio through the power cable. No Polarity connection

• Recommended cables: twisted pair, power flex multi-cores, speaker cable, CAT5/CAT6

• Minimum requirements 0.5mm cable up to 2mm (depends on distance)

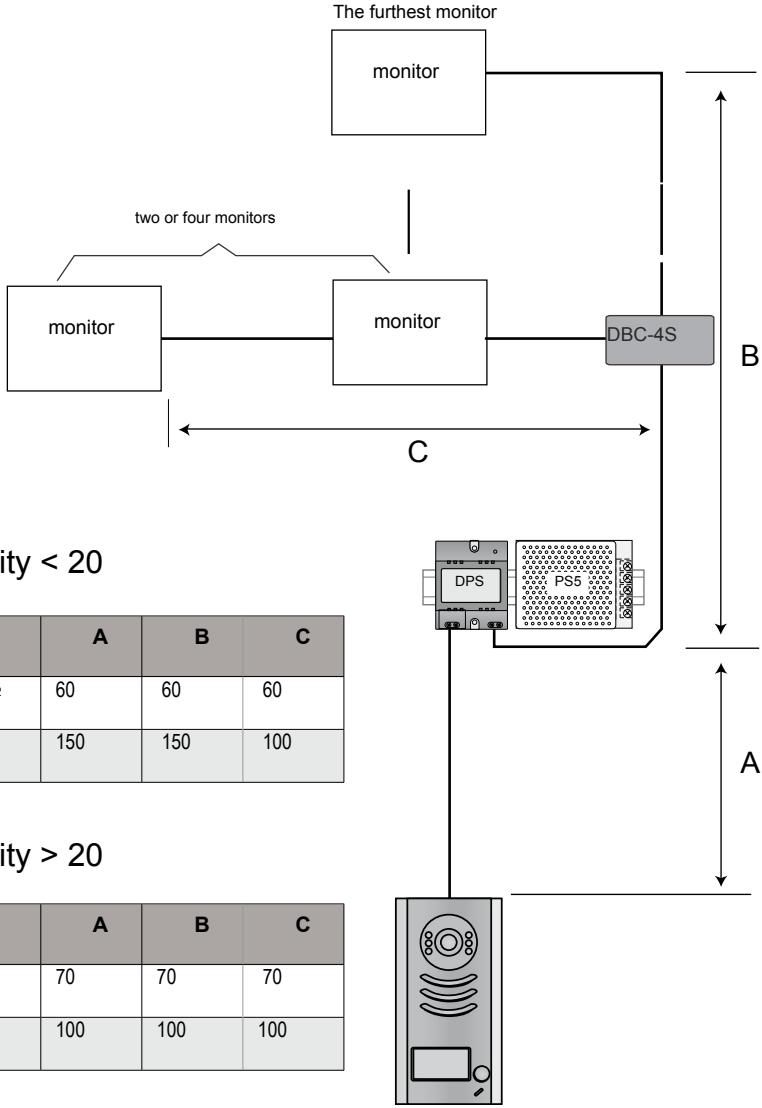

Monitors quantity < 20

Cable Usage	A	B	C
Twisted pair 2 x 0.75 mm^2	60	60	60
Twisted pair 2 x 1 mm^2	150	150	100

Monitors quantity > 20

Cable Usage	A	B	C
Twisted pair 2 x 1 mm^2	70	70	70
Twisted pair 2 x 1.5 mm^2	100	100	100

WARRANTY CARD

NB Please keep this document safe, as it is proof of your Warranty

Your Video door system comes with a one year Manufacturers Warranty. When used normally, the following services are offered:

1. Replacement for malfunctioning parts in first three months
2. Repair free of charge for malfunctioning parts in first year

The following actions will void the Warranty:

1. Damage to the device during installation
2. Damage to the device through misuse
3. Opening and/or disassembling the device
4. Attempting to force the device to perform functions for which it is not intended
5. Attaching the device to power supplies other than thoserecommended by the manufacturer

Distributor for Warranty purposes:

Intelligent Home Online Ltd
62 Hartley Old Road
Purley
Surrey
CR8 4HJ
+44 (0)20 86170015
www.intelligenthomeonline.com

Product:_____

Serial Number:_____

Invoice N: _____

Purchase Date_____

Intelligent Home®

The design and specifications can be changed without notice to the user.
Right to interpret and copyright of this manual are preserved.

www.intelligenthomeonline.com